Model: AL-222HD

Date: 02/2024

HD Video Balun

SINGLE CHANNEL

Item		Specification
Properties	Transmission Signal	1 channel
	Transmission Distance	HD-CVI - 720p-450m, 1080p-250m, 5MP-200m HD-TVI - 720p-400m, 1080p-250m, 5MP-200m AHD - 720p-450m, 1080p-250m, 5MP-200m
	Category Type	UTP CAT5 /5E/6
Video Transmission Properties and port	Coaxial Video Connector	BNC-M
	Twisted-pair Video Connector	Push-terminal
	Compatible Format	HDCVI/HDTVI/AHD
	Resolution	720P/1080P/3MP/4MP/5MP
	Anti-interference	>60db
Protection	ESD	1a contact discharge electricity level 3
		1b air discharge electricity level 3
		Per: IEC61000-4-2
	Coaxial Cable Connector	2KV(common-code) Per: IEC61000-4-5
	UTP Cable Connector	2KV(different-code),4KV (common-code),Per: IEC61000-4-5
Impedance	BNC Male	75 ohms
	UTP Cable	100 ohms

Item		Specification
Physical Properties	Dimension (L*W*H)	35mm*19mm*16mm
	Shell	ABS
	Color	Black
	N. W.	21.2G
Stability	MTBF	>10000H
Environmental	Operating Temperature	-10-55℃
	Storage Temperature	-20-70℃
	Humidity	0-95% (non-condensing)

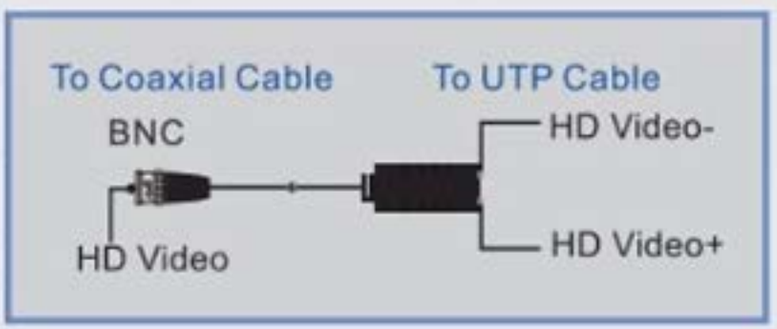



CE FC RoHS

MADE IN CHINA