uniarch DATASHEET

4MP Mini Fixed Bullet Network Camera

IPC-B114-PF28(40)



Key Features

Optics

- Day/night functionality
- Smart IR, up to 30m (98ft) IR distance
- Optical glass window with higher light transmittance
- IR anti-reflection window to increase the infrared transmittance
- 2D/3D DNR (Digital Noise Reduction)

Compression

- Ultra 265, H.265, H.264, MJPEG
- ROI (Region of Interest)

Network

- ONVIF Conformance

Structure

- Wide temperature range: -30°C ~ 60°C (-22°F ~ 140°F)
- Wide voltage range of ±25%
- IP67

Specifications

	IPC-B114-PF28		IPC-B114-PF40		
Camera					
Sensor	1/2.7", progressive scan, CMOS				
Lens	2.8mm@F2.0		4.0mm@F2.0		
DORI Distance	Lens (mm)	Detect (m)	Observe (m)	Recognize (m)	Identify (m)
	2.8	56.0	22.4	11.2	5.6
	4.0	80.0	32.0	16.0	8.0
Angle of View (H)	112.7°		86.5°		
Angle of View (V)	60.1°		44.1°		
Angle of View (O)	146.5°		106.4°		
Adjustment angle	Pan: 0° ~ 360°	Tilt: 0° ~ 90°	Rotate: 0° ~ 360°		
Shutter	Auto/Manual, 1 ~ 1/100000s				
Minimum Illumination	Colour: 0.02Lux (F2.0, AGC ON) 0Lux with IR on				
Digital noise reduction	2D/3D DNR				
Day/Night	IR-cut filter with auto switch (ICR)				
S/N	>52dB				
IR Range	Up to 30m (98ft) IR range				
Defog	Digital Defog				
WDR	DWDR				
Video					
Video Compression	Ultra 265, H.265, H.264, MJPEG				
H.264 code profile	Baseline profile, Main Profile				
Frame Rate	Main Stream: 4MP (2560*1440), Max 20fps; 1080P (1920*1080), Max 20fps; Sub Stream: 720P (1280*720), Max 20fps				
HLC	Supported				
BLC	Supported				
OSD	Up to 4 OSDs				
Privacy Mask	Up to 4 areas				
ROI	Up to 2 areas				
Motion Detection	Up to 4 areas				
Network					
Protocols	IPv4, IGMP, ICMP, ARP, TCP, UDP, DHCP, RTP, RTSP, RTCP, DNS, DDNS, NTP, FTP, UPnP, HTTP, HTTPS, SMTP, SSL, QoS, RTMP				
Compatible Integration	ONVIF (Profile S, Profile T), API				
Interface					
Network	10/100M Base-TX Ethernet				
General					
Power	DC 12V±25%, PoE (IEEE 802.3af)				
	Power consumption: Max 4.5W				
Dimensions (L × W × H)	142.1 × 62.4 × 65.2mm (5.6” × 2.5” × 2.6”)				
Weight	0.18kg (0.40lb)				
Working Environment	-30°C ~ 60°C (-22°F ~ 140°F), Humidity: ≤95% RH (non-condensing)				

Ingress Protection	IP67

Dimensions

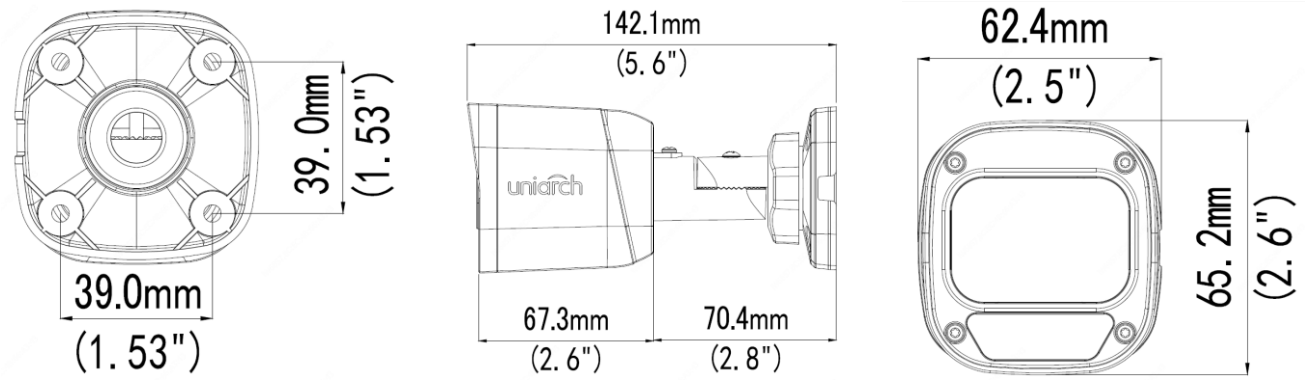

©2019 Zhejiang Uniview Technologies Co., Ltd. All rights reserved.

*Product specifications and availability are subject to change without notice.