DS-2CD2441G0-I(W)
4 MP PIR Cube Network Camera





- High quality imaging with 4 MP resolution
- Efficient H.265+ compression technology
- Provide real-time security via built-in two-way audio
- Detect human body through passive infrared which is sensitive to body temperature (PIR)

▪ Specification

Camera	
Image Sensor	1/3" Progressive Scan CMOS
Max. Resolution	2560 × 1440
Min. Illumination	2 mm: Color: 0.01 Lux @ (F2.25, AGC ON), B/W: 0 Lux with IR 2.8 mm and 4 mm: Color: 0.01 Lux @ (F1.6, AGC ON), B/W: 0 Lux with IR
Shutter Time	1/3 s to 1/100, 000 s
Day & Night	IR cut filter
Angle Adjustment	Pan: 0° to 360°, tilt: 0° to 90°, rotate: 0° to 360°
Lens	
Lens Type	Fixed focal length, 2, 2.8, and 4 mm optional
Focal Length & FOV	2 mm, horizontal FOV 122.6°, vertical FOV 71.7°, diagonal FOV 139.9° 2.8 mm, horizontal FOV 98.6°, vertical FOV 52.8°, diagonal FOV 116.2° 4 mm, horizontal FOV 78°, vertical FOV 42.7°, diagonal FOV 90.7°
Lens Mount	M12
Iris Type	Fixed
Aperture	2 mm: F2.25 2.8 mm: F1.6 4 mm: F1.6
DORI	
DORI	2 mm: D: 45.5 m, O: 18.0 m, R: 9.1 m, I: 4.5 m 2.8 mm: D: 56.0 m, O: 22.2 m, R: 11.2 m, I: 5.6 m 4 mm: D: 79.4 m, O: 31.5 m, R: 15.9 m, I: 7.9 m
Illuminator	
Supplement Light Range	Up to 10 m
Smart Supplement Light	Yes
IR Wavelength	850 nm
Video	
Main Stream	50 Hz: 20 fps (2560 × 1440), 25 fps (1920 × 1080, 1280 × 720) 60 Hz: 20 fps (2560 × 1440), 30 fps (1920 × 1080, 1280 × 720)
Sub-Stream	50 Hz: 25 fps (1280 × 720, 640 × 480, 640 × 360) 60 Hz: 30 fps (1280 × 720, 640 × 480, 640 × 360)
Video Compression	Main stream: H.265+/H.265/H.264+/H.264 Sub-stream: H.265/H.264/MJPEG
Video Bit Rate	32 Kbps to 8 Mbps
H.264 Type	Baseline Profile/Main Profile/High Profile
H.265 Type	Main Profile
Bit Rate Control	CBR/VBR
Scalable Video Coding (SVC)	Yes
Region of Interest (ROI)	1 fixed region for main stream
Audio	
Audio Compression	G.711ulaw/G.711alaw/G.722.1/G.726/MP2L2/PCM/AAC
Audio Bit Rate	64 Kbps (G.711ulaw/G.711alaw)/16 Kbps (G.722.1)/16 Kbps (G.726)/32 to 160 Kbps (MP2L2)/16 to 64 Kbps (AAC)
Audio Sampling Rate	8 kHz/16 kHz

Environment Noise Filtering	Yes
Network	
Protocols	TCP/IP, ICMP, HTTP, HTTPS, FTP, DHCP, DNS, DDNS, RTP, RTSP, RTCP, NTP, UPnP™, SMTP, IGMP, 802.1X(-W model does not support), QoS, IPv6, Bonjour, IPv4, UDP, SSL/TLS, SNMP, PPPoE
Simultaneous Live View	Up to 6 channels
API	Open Network Video Interface, ISAPI
User/Host	Up to 32 users. 3 levels: administrator, operator and user
Security	Password protection, complicated password, HTTPS encryption, IP address filter, Security Audit Log, basic and digest authentication for HTTP/HTTPS, TLS 1.1/1.2, WSSE and digest authentication for Open Network Video Interface
Client	iVMS-4200, Hik-Connect
Web Browser	Plug-in required live view: IE 10+ Plug-in free live view: Chrome 57.0+, Firefox 52.0+ Local service: Chrome 57.0+, Firefox 52.0+
Wi-Fi	
Encryption Mode	-IW: 64/128-bit WEP, WPA-EAP/WPA2-EAP, WPA-PSK/WPA2-PSK
Wi-Fi Protocol	-IW: 802.11b: CCK, QPSK, BPSK 802.11g/n: OFDM
Frequency Range	-IW: 2.412 GHz - 2.472 GHz
Channel Bandwidth	-IW: 20/40 MHz
Modulation	-IW: 802.11b: CCK, QPSK, BPSK 802.11g/n: OFDM
Transfer Rate	-IW: 11b/g: 54 Mbps 11n: up to 150 Mbps
Wireless Range	-IW: Up to 50 m (The performance varies based on actual environment)
Image	
Image Settings	Saturation, brightness, contrast, sharpness, AGC, white balance adjustable by client software or web browser.
Day/Night Switch	Day, Night, Auto, Schedule
Wide Dynamic Range (WDR)	120 dB
Image Enhancement	BLC, 3D DNR
PIR	
PIR Angle	Horizontal: 90°, vertical: 80°
PIR Range	Up to 8 m
Interface	
Ethernet Interface	1 RJ45 10 M/100 M self-adaptive Ethernet port
On-Board Storage	Built-in memory card slot, support microSD/SDHC/SDXC card, up to 256 GB
Built-in Microphone	Yes
Built-in Speaker	Power: 1 W. Max. sound pressure level: 10 cm: 91 dB.

Reset Key	Yes
Event	
Basic Event	Motion detection, video tampering alarm, exception
Smart Event	Line crossing detection, intrusion detection
Linkage	Upload to FTP/memory card, notify surveillance center, send email, trigger recording, trigger capture, audible warning
General	
Power	-I: 12 VDC ± 25%, 0.49 A, max. 5.8 W, Ø5.5 mm coaxial power plug PoE: 802.3af, Class 3, 36 V to 57 V, 0.19 A to 0.12 A, max. 6.8 W -IW: 12 VDC ± 25%, 0.66 A, max. 7.9 W, Ø5.5 mm coaxial power plug PoE: 802.3af, Class 3, 36 V to 57 V, 0.25 A to 0.16 A, max. 8.9 W
Dimension	2 mm: 102.9 mm × 65.2 mm × 28.8 mm (4.1" × 2.6" × 1.1") 2.8 mm and 4 mm: 102.9 mm × 65.2 mm × 32.6 mm (4.1" × 2.6" × 1.3")
Package Dimension	150 mm × 125 mm × 99 mm (5.9" × 4.9" × 3.9")
Weight	Approx. 115 g (0.3 lb.)
With Package Weight	Approx. 330 g (0.7 lb.)
Storage Conditions	-10 °C to 40 °C (14 °F to 104 °F). Humidity 95% or less (non-condensing)
Startup and Operating Conditions	-10 °C to 40 °C (14 °F to 104 °F). Humidity 95% or less (non-condensing)
Language	33 languages English, Russian, Estonian, Bulgarian, Hungarian, Greek, German, Italian, Czech, Slovak, French, Polish, Dutch, Portuguese, Spanish, Romanian, Danish, Swedish, Norwegian, Finnish, Croatian, Slovenian, Serbian, Turkish, Korean, Traditional Chinese, Thai, Vietnamese, Japanese, Latvian, Lithuanian, Portuguese (Brazil), Ukrainian
General Function	Anti-flicker, heartbeat, mirror, password protection, privacy mask, watermark, IP address filter
Approval	
RF	-IW: FCC ID (FCC Part 15.247(BT or 2.4G)); CE-RED (EN 301489-1 V2.1.1(BT or 2.4G); EN 301489-17 V3.1.1(BT or 2.4G); EN 300328 V2.1.1(BT or 2.4G); EN 62311:2008(BT or 2.4G))
EMC	FCC (47 CFR Part 15, Subpart B) CE-EMC (EN 55032: 2015, EN 61000-3-2: 2019, EN 61000-3-3: 2013+A1: 2019, EN 50130-4: 2011+A1: 2014)
Safety	CB (IEC 62368-1: 2014+A11) CE-LVD (EN 62368-1: 2014/A11: 2017)
Environment	CE-RoHS (2011/65/EU); WEEE (2012/19/EU); Reach (Regulation (EC) No 1907/2006)

▪ Available Model

DS-2CD2441G0-I (2/2.8/4 mm)

DS-2CD2441G0-IW (2/2.8/4 mm)

▪ Typical Application

Hikvision products are classified into three levels according to their anti-corrosion performance. Refer to the following description to choose for your using environment.

This model has NO SPECIFIC PROTECTION.

Level	Description
Top-level protection	Hikvision products at this level are equipped for use in areas where professional anti-corrosion protection is a must. Typical application scenarios include coastlines, docks, chemical plants, and more.
Moderate protection	Hikvision products at this level are equipped for use in areas with moderate anti-corrosion demands. Typical application scenarios include coastal areas about 2 kilometers (1.24 miles) away from coastlines, as well as areas affected by acid rain.
No specific protection	Hikvision products at this level are equipped for use in areas where no specific anti-corrosion protection is needed.

▪ Dimension

2 mm Model

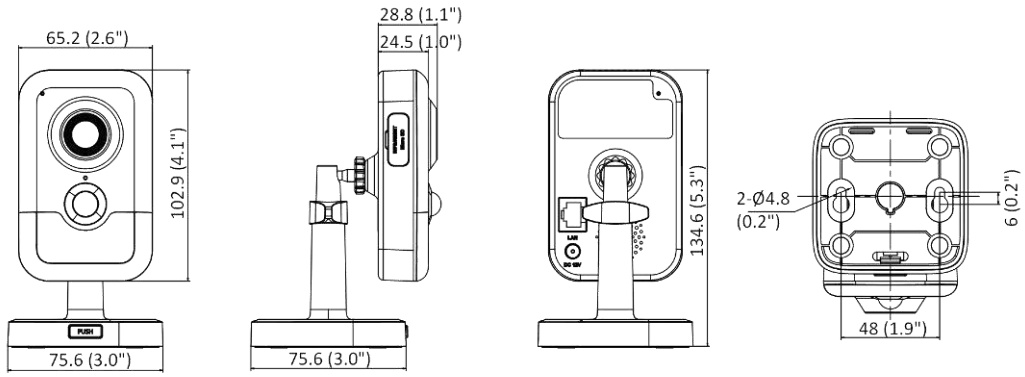

Unit: mm (inch)

2.8 and 4 mm Model

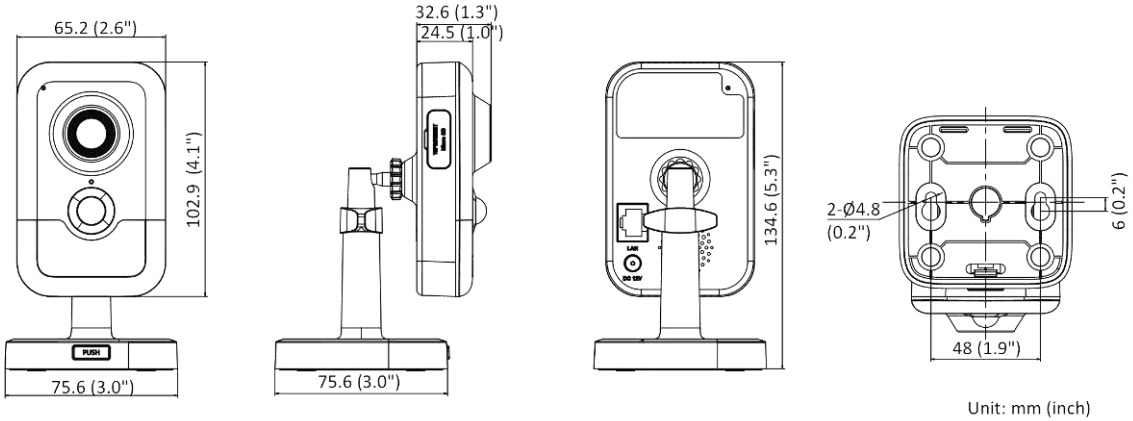

Unit: mm (inch)