NK42W0H-1T(E)
Wi-Fi Kit





- One pack provides everything required for small monitoring scenarios:One 4-ch Wi-Fi NVR with decoding up to 2-ch @ 2MP
- Four 2 MP bullet Wi-Fi cameras with efficient H.265 compression technology
- One network cable and one HDMI cable
- Pre-install 1 TB HDD
- Auto Wi-Fi connection and easy installation
- Hik-Connect cloud service and app for remote management and viewing of devices.

▪ Specification

Camera	
Focal Length	2.8 mm
Aperture	F1.6
Focus	Fixed
FOV	2.8 mm, horizontal FOV: 112°, vertical FOV: 59°, diagonal FOV: 134°
Lens Mount	M12
Camera	
IR Range	Up to 30 m
Camera	
Video Compression	Main stream: H.265+/H.264+/H.265/H.264 Sub-stream: H.265/H.264
H.265 Type	Main Profile
H.265+	Main stream supports
Video Bit Rate	32 Kbps to 8 Mbps
Audio Compression	G.711ulaw/G.711alaw/G.722.1/G.726/MP2L2/PCM/AAC
Audio Bit Rate	64 Kbps(G.711 ulaw)/64 Kbps(G.711 alaw)/16Kbps(G.722.1)/16Kbps(G.726)/32-160Kbps(MP2L2)/16-64Kbps(AAC)
Audio Sampling Rate	8 kHz/16 kHz
Environment Noise Filtering	Yes
Camera	
Max. Resolution	1920 × 1080
Main Stream	50Hz: 25 fps (1920 × 1080, 1280 × 720) 60Hz: 30 fps (1920 × 1080, 1280 × 720)
Sub-stream	50Hz: 25 fps (640 × 360) 60Hz: 30 fps (640 × 360)
Image Setting	Mirror, privacy mask, saturation, brightness, contrast, sharpness, gain, white balance adjustable by client software or web browser
Camera	
Protocols	TCP/IP, ICMP, DHCP, DNS, DDNS, HTTP, HTTPS, RTP, RTSP, NTP, UPnP, IGMP, IPv6, UDP, QoS, Bonjour
General Function	Anti-flicker, heartbeat, password reset via e-mail
Client	iVMS-4200, Hik-Connect
Camera	
Communication Interface	1 RJ45 10M/100M self-adaptive Ethernet port
Audio I/O	1 Built-in mic
Camera	
Power Supply	12 VDC ± 25%, Ø5.5 mm coaxial power plug, reverse polarity protection
Consumption	12 VDC, 0.5 A, max. 6.0 W
Working Temperature	-30 °C to 60 °C (-22 °F to 140 °F)
Working Humidity	95% or less (non-condensing)
Dimension (W × D × H)	175.6 × 73.0 × 89.1 mm (6.9" × 2.9" × 3.5")
Weight	330 g (0.7 lb.)
Camera	
Camera Case Type	Bullet
Image Sensor	1/2.7" Progressive Scan CMOS

Min. Illumination	Color: 0.018 Lux @ (F1.6, AGC ON), 0 Lux with IR
Shutter Speed	1/3 s to 1/100,000 s
Day ＆Night	IR cut filter
WDR	DWDR
Angle Adjustment	Pan: 0° to 360°, tilt: 0° to 90°, rotate: 0° to 360°
Protection Level	IP66
Material	Front cover: metal, back cover: plastic
Wi-Fi Support	Yes
NVR	
IP Video Input	4-ch
Incoming/Outgoing Bandwidth	50 Mbps/40 Mbps
HDMI/VGA Output	1-ch, resolution: 1920 × 1080/60Hz, 1280 × 1024/60Hz, 1280 × 720/60Hz, 1024 × 768/60Hz HDMI/VGA simultaneous output
Audio Output	1-ch, RCA (linear, 1 KΩ)
NVR	
Video Resolution	4 MP/3 MP/1080p/1.3 MP/720p
Synchronous Playback	4-ch
Capability	4-ch@4 MP (12 fps)/4-ch@1080p (25 fps)
NVR	
Network Interface	1, RJ45 10/100M Ethernet interface
Network Protocol	IPv6, UPnP™, NTP, SADP, DHCP
Remote Connection	16
NVR	
Frequency Band	2.4 GHz
Antenna Structure	2 × 2MIMO
Transmission Speed	144 Mbps
Transmission Standard	IEEE 802.11b/g/n
NVR	
SATA	1
Capacity	Up to 6 TB capacity for each disk
USB Interface	Rear panel: 2 × USB 2.0
NVR	
Power Supply	12 VDC
Consumption (without HDD and PoE off)	≤ 12 W
Working Temperature	-10 °C to 55 °C (14 °F to 131 °F)
Working Humidity	10% to 90%
Dimension (W × D × H)	265 × 225 × 48 mm (10.4" × 8.9" × 1.9")
Weight (without hard disk)	≤ 1.6 kg (3.5 lb.)
Kit	
Accessories	Power cable: 4 × IPC power cables, 1 × NVR power cable Ethernet cable: RJ45, Cat5e UTP, 1 m. Connects NVR and Switch HDMI cable: 1 × HDMI cable, 2 m, black
Hard Drive	-1T:Pre-installed 1 TB HDD
Certification	FCC, CE

Weight (with package)	≤ 7 kg (15.4 lb.)

▪ Physical Interface

No.	Description	No.	Description
1	Antenna Interface	5	HDMI Interface
2	Power Supply	6	USB Interface
3	Audio Interface	7	LAN Network Interface
4	VGA Interface	8	Ground

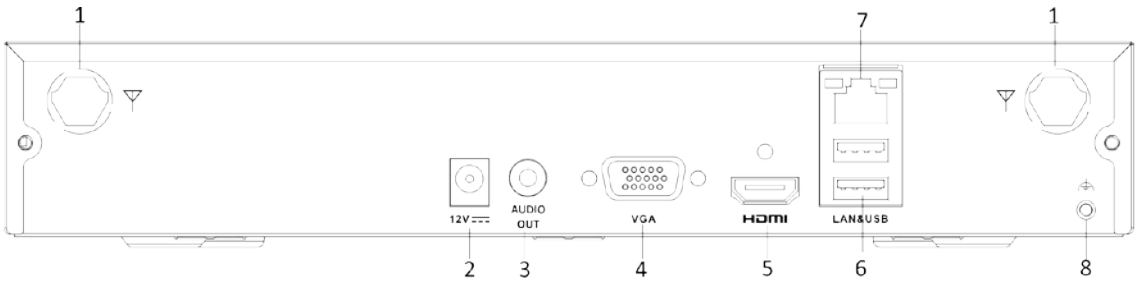

▪ Available Model

NK42W0H-1T(E)(海外标配)/欧标(样机)

▪ Dimension

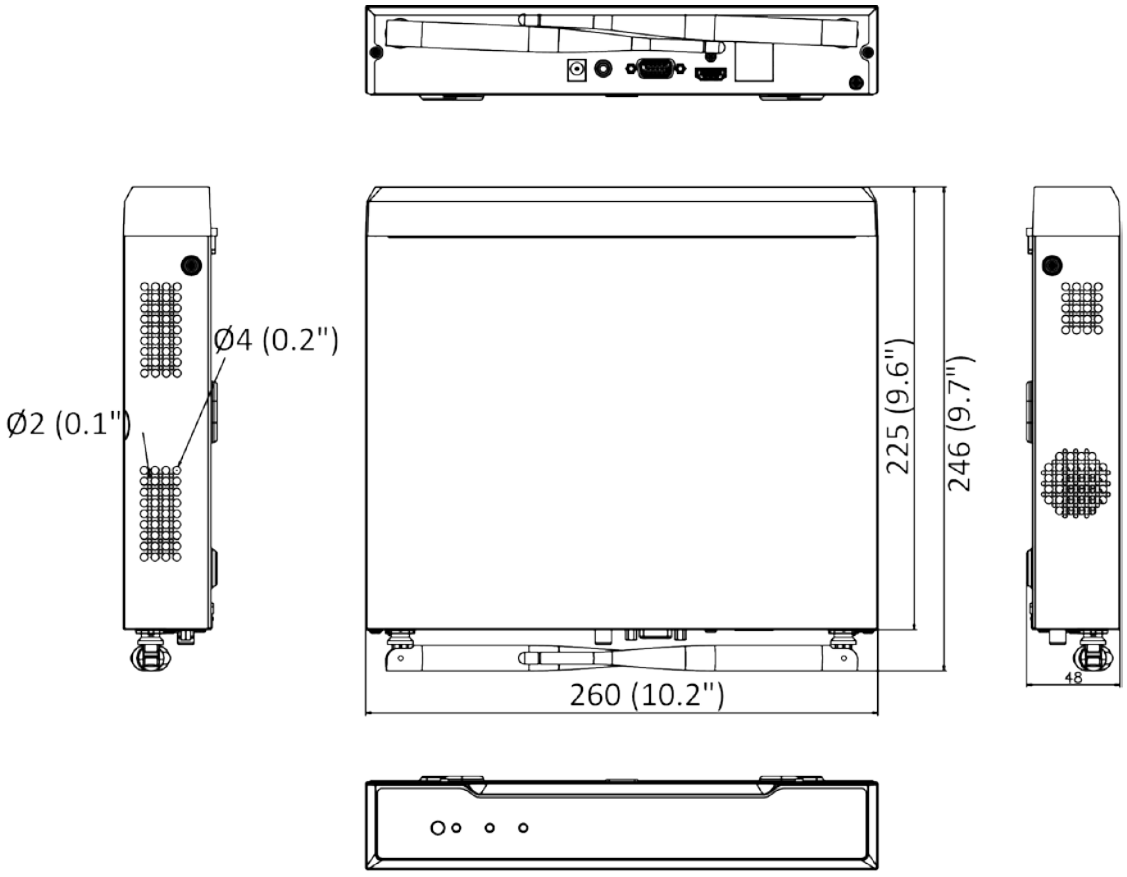

Unit: mm (inch)

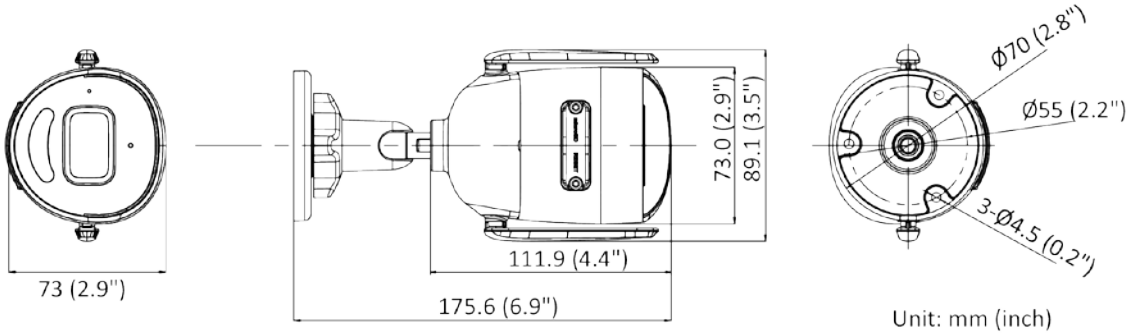

Unit: mm (inch)

- **Accessory**
- **Optional**

DS-1280ZJ-XS
Junction Box

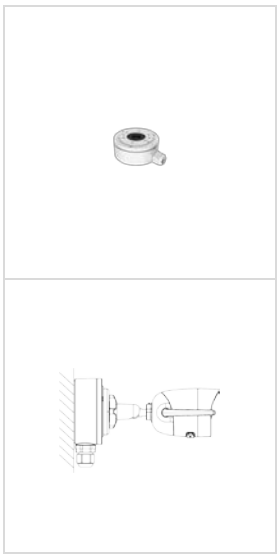

Headquarters
No.555 Qianmo Road, Binjiang District,
Hangzhou 310051, China
T +86-571-8807-5998
www.hikvision.com

Follow us on social media to get the latest product and solution information.

Hikvision HikvisionHQ HikvisionHQ Hikvision_Global Hikvision Corporate Channel hikvisionhq

©Hikvision Digital Technology Co., Ltd. 2022 I Data subject to change without notice I